COPYRIGHT AND CONFIDENTIAL
The information on this document is the property of BHARAT HEAVY ELECTRICALS LIMITED,
It must not be used directly or indirectly in any way detrimental to the interest of the company.

## GI CABLE DUCTS AND ACCESSORIES (CATEGORY-1)

This specification shall be read in conjunction with PY 55147, Technical specifications for GI Cable /Tubes Ducts and Accessories and PY 55148, GI Cable Ducts and Accessories (Category-1).

This specification covers the constructional, dimensional and sectional details of various kinds of GI cable ducts fabrication details and accessories (Category-1) and same are given in the following pages.

COPYRIGHT AND CONFIDENTIAL
The information on this document is the property of BHARAT HEAVY ELECTRICALS LIMITED .
It must not be used directly or indirectly in any way detrimental to the interest of the company.

**TYPICAL ARRANGEMENT FOR DUCT HEIGHT REDUCER ALONG WITH ACCESSORIES AND JOINTING PLATES (CATEGORY-1)**

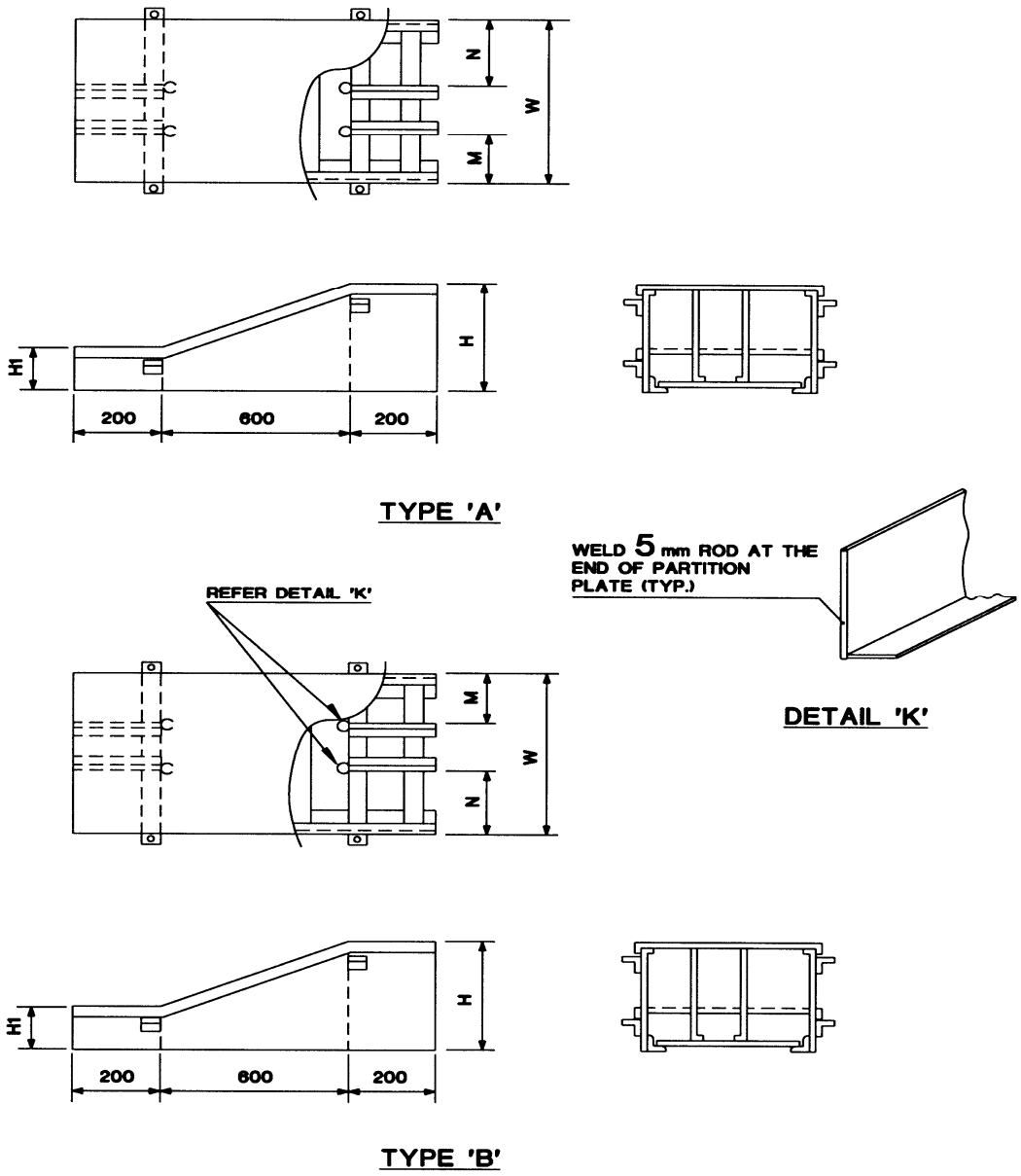


# DUCT HEIGHT REDUCER

COPYRIGHT AND CONFIDENTIAL
The information on this document is the property of BHARAT HEAVY ELECTRICALS LIMITED .
It must not be used directly or indirectly in any way detrimental to the interest of the company.

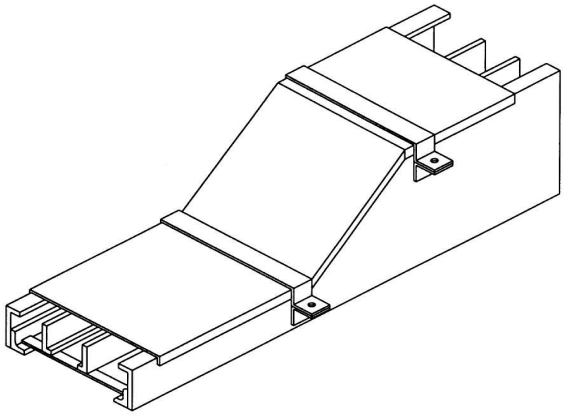

**MATERIAL CODES FOR DUCT HEIGHT REDUCER (TYPE-A) WITH JOINTING PLATES AND COVER SHEETS (CATEGORY-1)**

| VARIANT NO. | DESCRIPTION | MATERIAL CODE |
|---|---|---|
| 88. | 1200mm Width, 400mm height to 300mm height duct height reducer (Type-A) with accessories including Joining plate-CAT-1. | PY9755149010 |
| 89. | 1200mm Width, 400mm height to 200mm height duct height reducer (Type-A) with accessories including Joining plate-CAT-1. | PY9755149028 |
| 90. | 1000mm Width, 400mm height to 300mm height duct height reducer (Type-A) with accessories including Joining plate-CAT-1. | PY9755149036 |
| 91. | 1000mm Width, 400mm height to 200mm height duct height reducer (Type-A) with accessories including Joining plate-CAT-1. | PY9755149044 |
| 92. | 800mm Width, 300mm height to 200mm height duct height reducer (Type-A) with accessories including Joining plate-CAT-1. | PY9755149052 |
| 93. | 600mm Width, 300mm height to 200mm height duct height reducer (Type-A) with accessories including Joining plate-CAT-1. | PY9755149060 |
| 94. | 400mm Width, 300mm height to 200mm height duct height reducer (Type-A) with accessories including Joining plate-CAT-1. | PY9755149079 |

COPYRIGHT AND CONFIDENTIAL
The information on this document is the property of BHARAT HEAVY ELECTRICALS LIMITED .
It must not be used directly or indirectly in any way detrimental to the interest of the company.

**MATERIAL CODES FOR DUCT HEIGHT REDUCER (TYPE-B) WITH JOINTING PLATES AND COVER SHEETS (CATEGORY-1)**

| VARIANT NO. | DESCRIPTION | MATERIAL CODE |
|---|---|---|
| 95. | 1200mm Width, 400mm height to 300mm height duct height reducer (Type-B) with accessories including Joining plate-CAT-1. | PY9755149087 |
| 96. | 1200mm Width, 400mm height to 200mm height duct height reducer with accessories including Joining plate-Type-B-CAT-1. | PY9755149095 |
| 97. | 1000mm Width, 400mm height to 300mm height duct height reducer (Type-B) with accessories including Joining plate-CAT-1. | PY9755149109 |
| 98. | 1000mm Width, 400mm height to 200mm height duct height reducer (Type-B) with accessories including Joining plate-CAT-1. | PY9755149117 |
| 99. | 800mm Width, 300mm height to 200mm height duct height reducer (Type-B) with accessories including Joining plate-CAT-1. | PY9755149125 |
| 100. | 600mm Width, 300mm height to 200mm height duct height reducer (Type-B) with accessories including Joining plate-CAT-1. | PY9755149133 |
| 101. | 400mm Width, 300mm height to 200mm height duct height reducer (Type-B) with accessories including Joining plate-CAT-1. | PY9755149141 |

COPYRIGHT AND CONFIDENTIAL
The information on this document is the property of BHARAT HEAVY ELECTRICALS LIMITED .
It must not be used directly or indirectly in any way detrimental to the interest of the company.

## TYPICAL ARRANGEMENT FOR DUCT ELBOW (VERTICAL PLANE) ALONG WITH ACCESSORIES AND JOINTING PLATES (CATEGORY-1)

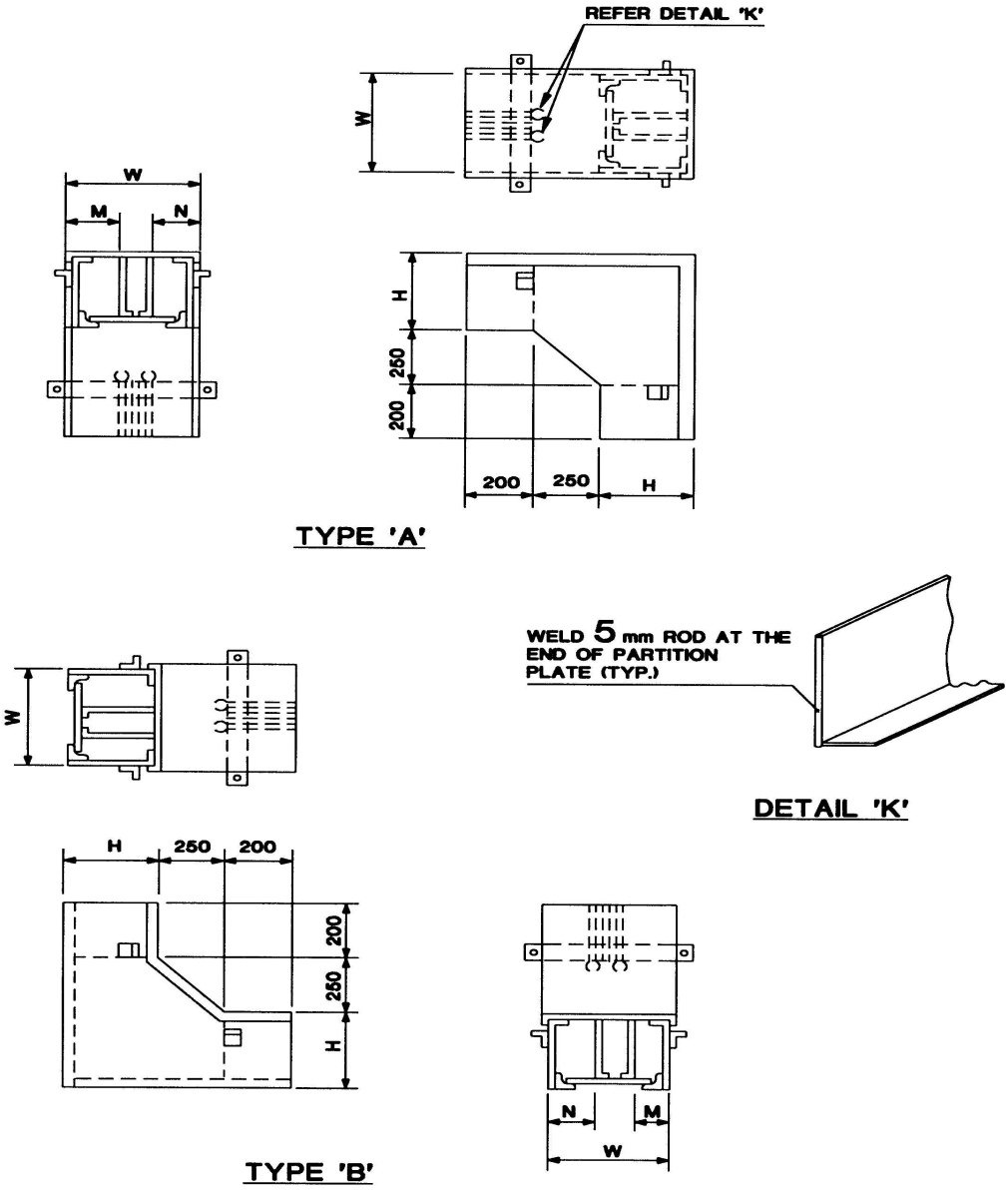


## VERTICAL PLANE ELBOW

COPYRIGHT AND CONFIDENTIAL
The information on this document is the property of BHARAT HEAVY ELECTRICALS LIMITED .
It must not be used directly or indirectly in any way detrimental to the interest of the company.

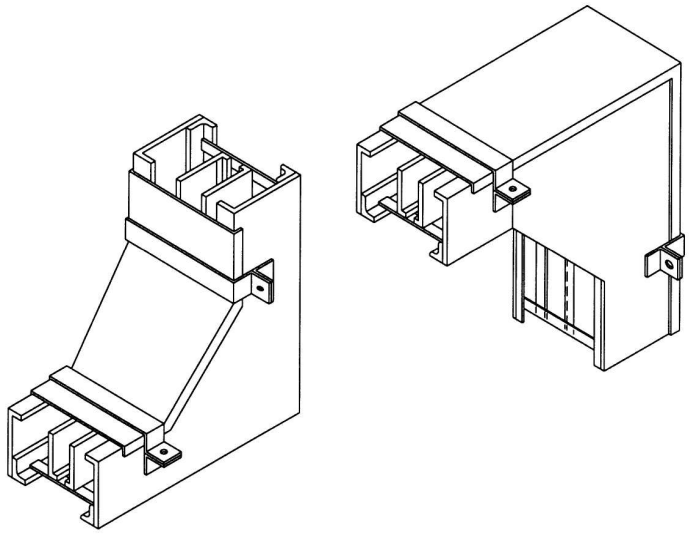

**MATERIAL CODES FOR DUCT ELBOW (VERTICAL PLANE) – (TYPE-A) WITH JOINTING PLATES AND COVER SHEETS (CATEGORY-1)**

| VARIANT NO. | DESCRIPTION | MATERIAL CODE |
|---|---|---|
| 102. | 1200mm Width, 400mm Height duct elbow (vertical plane) – (Type-A) with accessories including Joining plate-CAT-1. | PY9755149150 |
| 103. | 1000mm Width, 400mm Height duct elbow (vertical plane) – (Type-A) with accessories including Joining plate-CAT-1. | PY9755149168 |
| 104. | 800mm Width, 300mm Height duct elbow (vertical plane) – (Type-A) with accessories including Joining plate-CAT-1. | PY9755149176 |
| 105. | 600mm Width, 300mm Height duct elbow (vertical plane) – (Type-A) with accessories including Joining plate-CAT-1. | PY9755149184 |
| 106. | 400mm Width, 200mm Height duct elbow (vertical plane) – (Type-A) with accessories including Joining plate-CAT-1. | PY9755149192 |

COPYRIGHT AND CONFIDENTIAL
The information on this document is the property of BHARAT HEAVY ELECTRICALS LIMITED .
It must not be used directly or indirectly in any way detrimental to the interest of the company.

**MATERIAL CODES FOR DUCT ELBOW (VERTICAL PLANE) – (TYPE-B) WITH JOINTING PLATES AND COVER SHEETS (CATEGORY-1)**

| VARIANT NO. | DESCRIPTION | MATERIAL CODE |
|---|---|---|
| 107. | 1200mm Width, 400mm Height duct elbow (vertical plane) – (Type-B) with accessories including Joining plate-CAT-1. | PY9755149206 |
| 108. | 1000mm Width, 400mm Height duct elbow (vertical plane) – (Type-B) with accessories including Joining plate-CAT-1. | PY9755149214 |
| 109. | 800mm Width, 300mm Height duct elbow (vertical plane) – (Type-B) with accessories including Joining plate-CAT-1. | PY9755149222 |
| 110. | 600mm Width, 300mm Height duct elbow (vertical plane) – (Type-B) with accessories including Joining plate-CAT-1. | PY9755149230 |
| 111. | 400mm Width, 200mm Height duct elbow (vertical plane) – (Type-B) with accessories including Joining plate-CAT-1. | PY9755149249 |

COPYRIGHT AND CONFIDENTIAL
The information on this document is the property of BHARAT HEAVY ELECTRICALS LIMITED .
It must not be used directly or indirectly in any way detrimental to the interest of the company.

**TYPICAL ARRANGEMENT FOR DUCT VERTICAL PLANE TEE, JOINS UP ALONG WITH ACCESSORIES AND JOINTING PLATES (CATEGORY-1)**

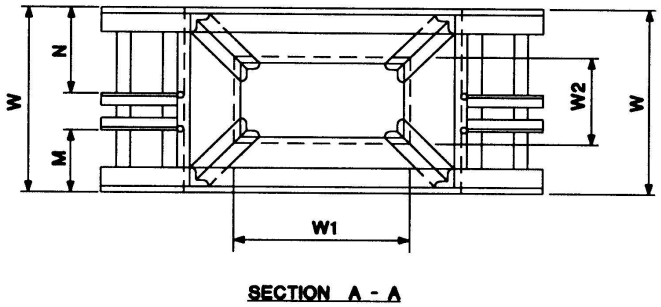


SECTION A - A

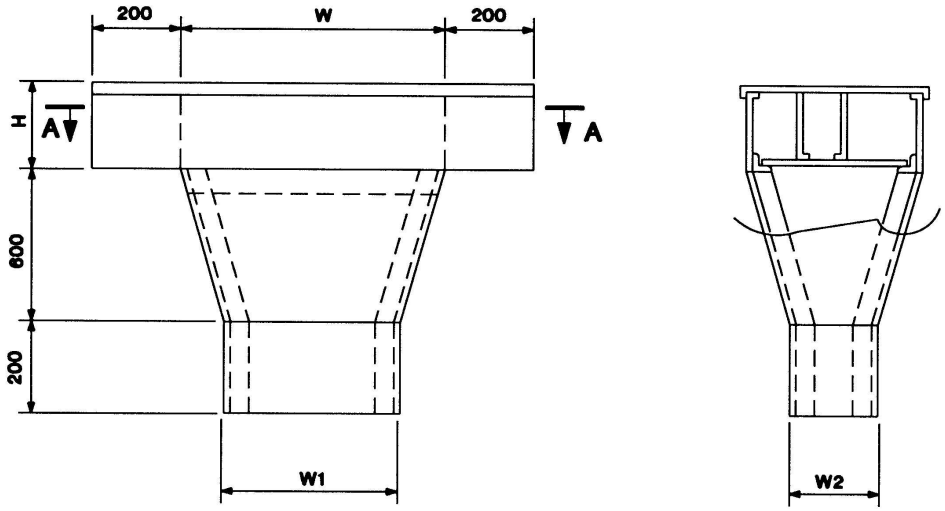


## VERTICAL PLANE TEE, JOINS UP

COPYRIGHT AND CONFIDENTIAL
The information on this document is the property of BHARAT HEAVY ELECTRICALS LIMITED .
It must not be used directly or indirectly in any way detrimental to the interest of the company.

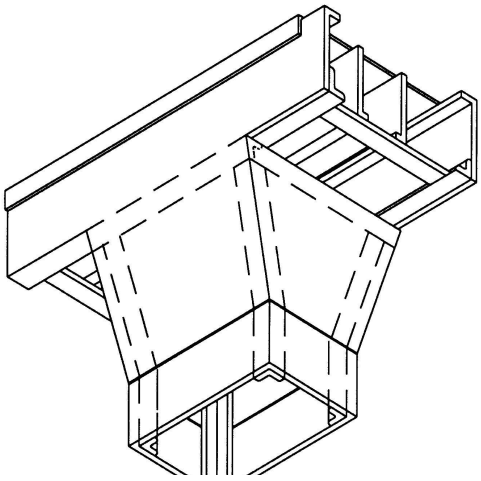

**MATERIAL CODES FOR DUCT VERTICAL PLANE TEE, JOINS UP WITH JOINTING PLATES AND COVER SHEETS - (CATEGORY-1)**

| VARIANT NO. | DESCRIPTION | MATERIAL CODE |
|---|---|---|
| 112. | 800mm Width, 300mm height duct vertical plane tee joins up with 1200mm width, 400mm height duct with accessories including Joining plate CAT-1. | PY9755149257 |
| 113. | 600mm Width, 300mm height duct vertical plane tee joins up with 1200mm width, 400mm height duct with accessories including Joining plate CAT-1. | PY9755149265 |
| 114. | 400mm Width, 200mm height duct vertical plane tee joins up with 1200mm width, 400mm height duct with accessories including Joining plate CAT-1. | PY9755149273 |
| 115. | 600mm Width, 300mm height duct vertical plane tee joins up with 1000mm width, 400mm height duct with accessories including Joining plate CAT-1. | PY9755149281 |
| 116. | 400mm Width, 200mm height duct vertical plane tee joins up with 1000mm width, 400mm height duct with accessories including Joining plate CAT-1. | PY9755149290 |
| 117. | 400mm Width, 200mm height duct vertical plane tee joins up with 800mm width, 300mm height duct with accessories including Joining plate CAT-1. | PY9755149303 |
| 118. | 400mm Width, 200mm height duct vertical plane tee joins up with 600mm width, 300mm height duct with accessories including Joining plate CAT-1. | PY9755149311 |

COPYRIGHT AND CONFIDENTIAL
The information on this document is the property of BHARAT HEAVY ELECTRICALS LIMITED .
It must not be used directly or indirectly in any way detrimental to the interest of the company.

**TYPICAL ARRANGEMENT FOR DUCT VERTICAL PLANE TEE, JOINS DOWN ALONG WITH ACCESSORIES AND JOINTING PLATES (CATEGORY-1)**

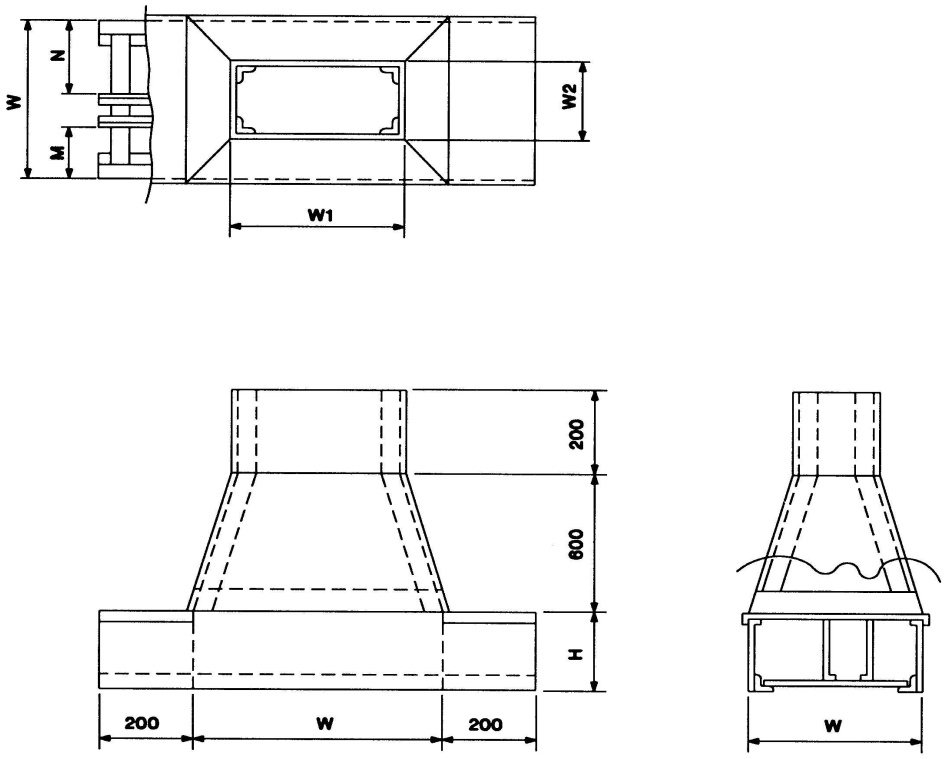


## VERTICAL PLANE TEE, JOINS DOWN

COPYRIGHT AND CONFIDENTIAL
The information on this document is the property of BHARAT HEAVY ELECTRICALS LIMITED .
It must not be used directly or indirectly in any way detrimental to the interest of the company.

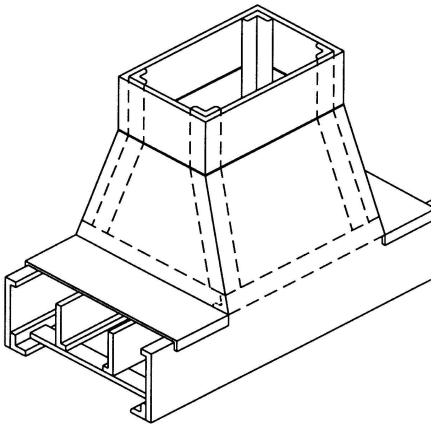

**MATERIAL CODES FOR DUCT VERTICAL PLANE TEE, JOINS DOWN WITH JOINTING PLATES AND COVER SHEETS - (CATEGORY-1)**

| VARIANT NO. | DESCRIPTION | MATERIAL CODE |
|---|---|---|
| 119. | 800mm Width, 300mm height duct vertical plane tee joins down with 1200mm width, 400mm height duct with accessories including Joining plate CAT-1. | PY9755149320 |
| 120. | 600mm Width, 300mm height duct vertical plane tee joins down with 1200mm width, 400mm height duct with accessories including Joining plate CAT-1.. | PY9755149338 |
| 121. | 400mm Width, 200mm height duct vertical plane tee joins down with 1200mm width, 400mm height duct with accessories including Joining plate CAT-1.. | PY9755149346 |
| 122. | 600mm Width, 300mm height duct vertical plane tee joins down with 1000mm width, 400mm height duct with accessories including Joining plate CAT-1.. | PY9755149354 |
| 123. | 400mm Width, 200mm height duct vertical plane tee joins down with 1000mm width, 400mm height duct with accessories including Joining plate CAT-1.. | PY9755149362 |
| 124. | 400mm Width, 200mm height duct vertical plane tee joins down with 800mm width, 300mm height duct with accessories including Joining plate CAT-1. | PY9755149370 |
| 125. | 400mm Width, 200mm height duct vertical plane tee joins down with 600mm width, 300mm height duct with accessories including Joining plate CAT-1. | PY9755149389 |

COPYRIGHT AND CONFIDENTIAL
The information on this document is the property of BHARAT HEAVY ELECTRICALS LIMITED .
It must not be used directly or indirectly in any way detrimental to the interest of the company.

**TYPICAL ARRANGEMENT FOR DUCT BRIDGE (JUMP-OVER) ALONG WITH ACCESSORIES AND JOINTING PLATES (CATEGORY-1)**

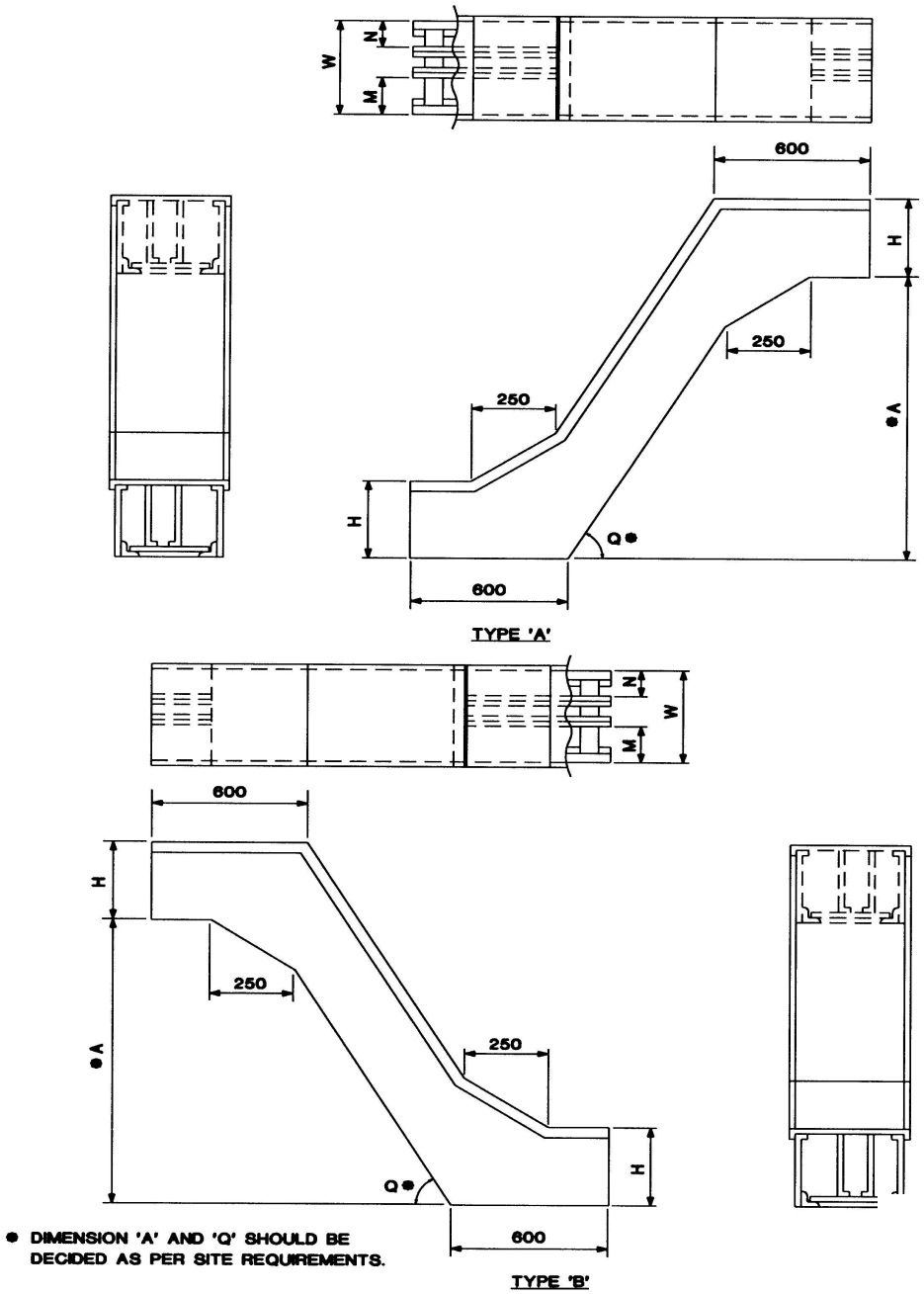


**DUCT BRIDGE (JUMP-OVER)**

COPYRIGHT AND CONFIDENTIAL
The information on this document is the property of BHARAT HEAVY ELECTRICALS LIMITED .
It must not be used directly or indirectly in any way detrimental to the interest of the company.

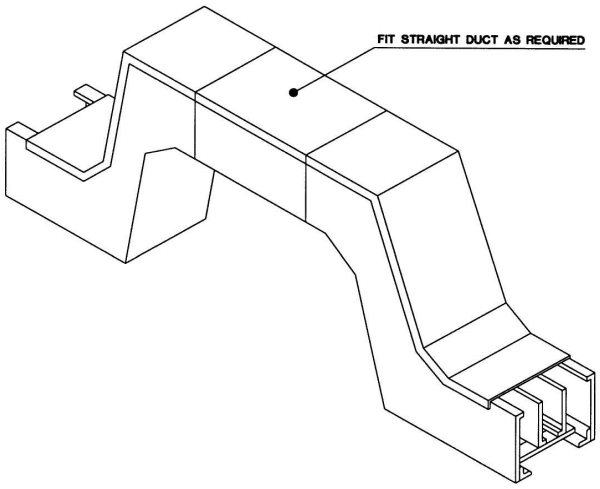


**MATERIAL CODES FOR DUCT BRIDGE (JUMP-OVER) – (TYPE-A) WITH JOINTING PLATES AND COVER SHEETS (CATEGORY-1)**

| VARIANT NO. | DESCRIPTION | MATERIAL CODE |
|---|---|---|
| 126. | 1200mm Width, 400mm Height duct bridge jump-over (Type-A) with accessories including Joining plate CAT-1. | PY9755149397 |
| 127. | 1000mm Width, 400mm Height duct bridge jump-over (Type-A) with accessories including Joining plate CAT-1. | PY9755149400 |
| 128. | 800mm Width, 300mm Height duct bridge jump-over (Type-A) with accessories including Joining plate CAT-1. | PY9755149419 |
| 129. | 600mm Width, 300mm Height duct bridge jump-over (Type-A) with accessories including Joining plate CAT-1. | PY9755149427 |
| 130. | 400mm Width, 200mm Height duct bridge jump-over (Type-A) with accessories including Joining plate CAT-1. | PY9755149435 |

COPYRIGHT AND CONFIDENTIAL
The information on this document is the property of BHARAT HEAVY ELECTRICALS LIMITED .
It must not be used directly or indirectly in any way detrimental to the interest of the company.

**MATERIAL CODES FOR DUCT BRIDGE (JUMP-OVER) – (TYPE-B) WITH JOINTING PLATES AND COVER SHEETS (CATEGORY-1)**

| VARIANT NO. | DESCRIPTION | MATERIAL CODE |
|---|---|---|
| 131. | 1200mm Width, 400mm Height duct bridge jump-over (Type-B) with accessories including Joining plate CAT-1. | PY9755149443 |
| 132. | 1000mm Width, 400mm Height duct bridge jump-over (Type-B) with accessories including Joining plate CAT-1. | PY9755149451 |
| 133. | 800mm Width, 300mm Height duct bridge jump-over (Type-B) with accessories including Joining plate CAT-1. | PY9755149460 |
| 134. | 600mm Width, 300mm Height duct bridge jump-over (Type-B) with accessories including Joining plate CAT-1. | PY9755149478 |
| 135. | 400mm Width, 200mm Height duct bridge jump-over (Type-B) with accessories including Joining plate CAT-1. | PY9755149486 |

COPYRIGHT AND CONFIDENTIAL
The information on this document is the property of BHARAT HEAVY ELECTRICALS LIMITED .
It must not be used directly or indirectly in any way detrimental to the interest of the company.

**TYPICAL ARRANGEMENT FOR END COVER**
**(COMMON FOR CATEGORY-1&2)**

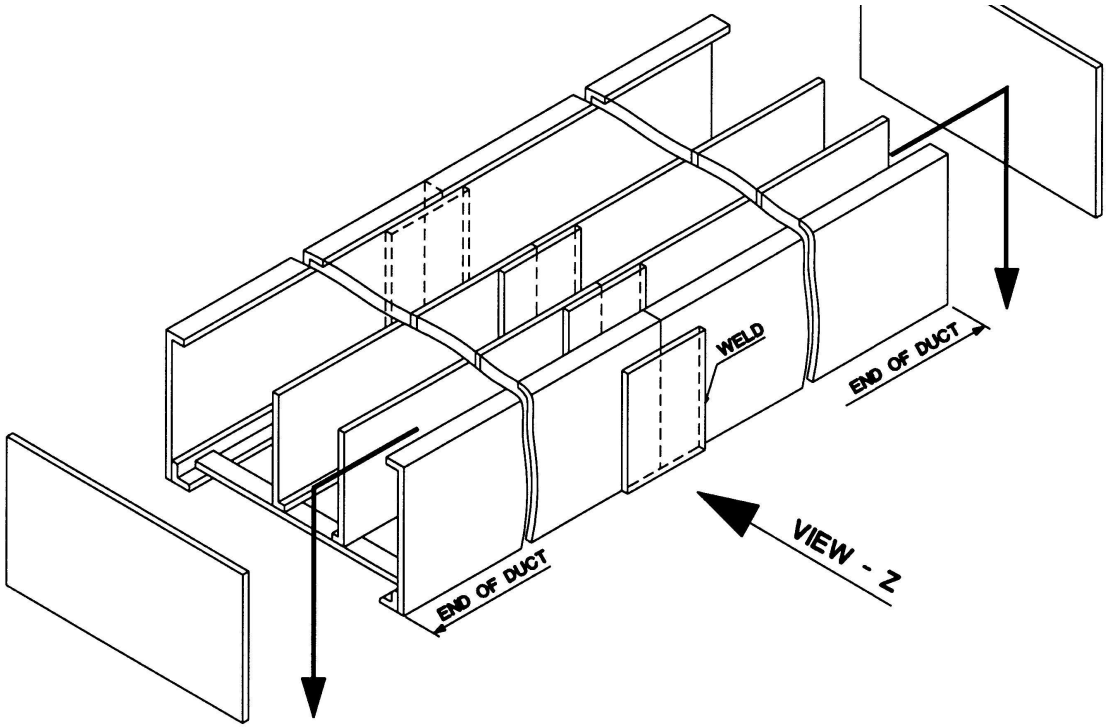


**COVER FAR ENDS OF DUCT BY WELDING**
**3.2mm THICK SHEETS AS SHOWN.**

# END COVER DETAILS

COPYRIGHT AND CONFIDENTIAL
The information on this document is the property of BHARAT HEAVY ELECTRICALS LIMITED .
It must not be used directly or indirectly in any way detrimental to the interest of the company.

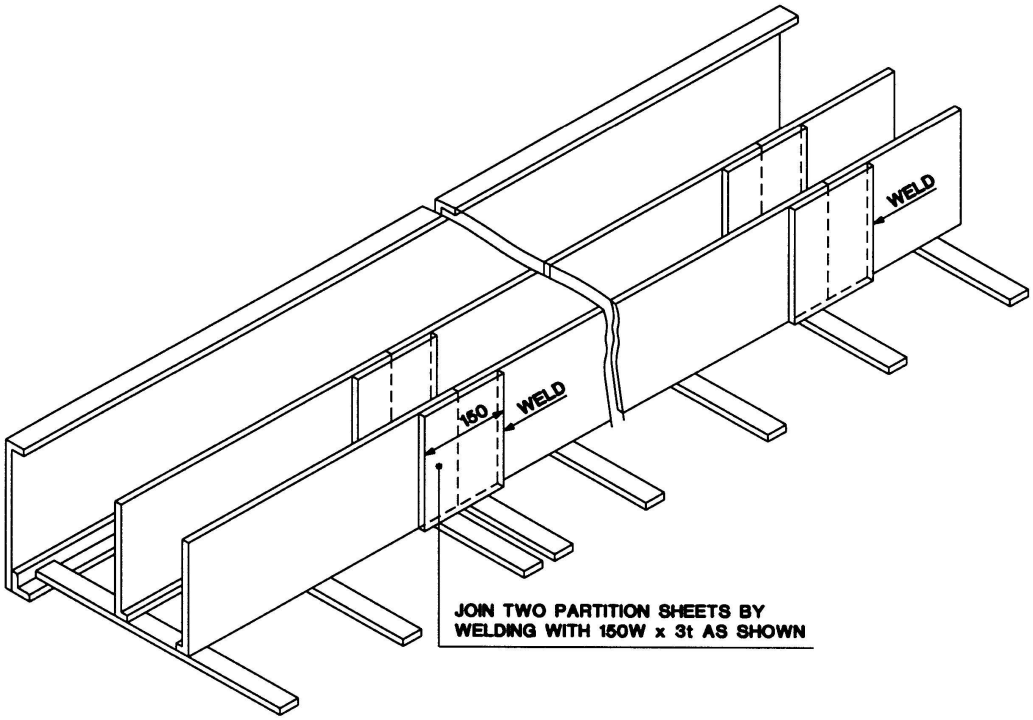


SECTIONAL VIEW 'Z'

# PARTITION JOINING DETAILS

COPYRIGHT AND CONFIDENTIAL
The information on this document is the property of BHARAT HEAVY ELECTRICALS LIMITED .
It must not be used directly or indirectly in any way detrimental to the interest of the company.

**MATERIAL CODES FOR DUCT END COVERS**

| VARIANT NO. | DESCRIPTION | MATERIAL CODE |
|---|---|---|
| 136. | End cover for 1200mm Width, 400mm Height cable duct | PY9755149494 |
| 137. | End cover for 1200mm Width, 300mm Height cable duct | PY9755149508 |
| 138. | End cover for 1200mm Width, 200mm Height cable duct | PY9755149516 |
| 139. | End cover for 1000mm Width, 400mm Height cable duct | PY9755149524 |
| 140. | End cover for 1000mm Width, 300mm Height cable duct | PY9755149532 |
| 141. | End cover for 1000mm Width, 200mm Height cable duct | PY9755149540 |
| 142. | End cover for 800mm Width, 300mm Height cable duct | PY9755149559 |
| 143. | End cover for 800mm Width, 200mm Height cable duct | PY9755149567 |
| 144. | End cover for 600mm Width, 300mm Height cable duct | PY9755149575 |
| 145. | End cover for 600mm Width, 200mm Height cable duct | PY9755149583 |
| 146. | End cover for 400mm Width, 200mm Height cable duct | PY9755149591 |

COPYRIGHT AND CONFIDENTIAL
The information on this document is the property of BHARAT HEAVY ELECTRICALS LIMITED .
It must not be used directly or indirectly in any way detrimental to the interest of the company.

## GENERAL NOTES:

1. All dimensions are in mm
2. Standard minimum straight length of duct and cover shall be 2500mm.
3. Duct shall be fabricated out of standard size of angles, flats, rods and sheets /plates as Indian Standards.
4. Bolts, Nuts and Washers used shall be Carbon Steel Zinc /Cadmium Plated.
5. Duct shall be free of any burrs /sharp edges and welding shall be of good quality.
6. Painting of duct shall be carried out as per requirement.
7. With in the duct, the partition height shall be up to the duct cover, providing bottom support to the cover to prevent sagging.

## RECORD OF REVISIONS

| Rev. No. | Date | Revision Details | Revised By | Approved By |
|---|---|---|---|---|
| 00 | 30/07/15 | Original Issue | --- | 30/07/15 ABU MALICK |

**COPYRIGHT AND CONFIDENTIAL**
The information on this document is the property of BHARAT HEAVY ELECTRICALS LIMITED,
It must not be used directly or indirectly in any way detrimental to the interest of the company.

Ref. Doc.